2.3.5 Project planning

A project consists of a set of m activities with their duration: activity A_i has (estimated) duration $d_i \geq 0$, $i = 1, \ldots, m$.

Some pairs of activities are subject to a precedence constraint: $A_i \propto A_j$ indicates that A_j can start only after the end of A_i.

Example

Activities: A, B, C, D, E

Precedences: $A \propto B, A \propto C, B \propto D, C \propto D, B \propto E$.

Model

A project can be represented by a directed graph $G = (N, A)$ where:

- each arc corresponds to an activity,
- arc length represents the duration of the activity.

To account for the precedence constraints, the arcs must be positioned so that:

$$A_i \propto A_j \Leftrightarrow \begin{array}{l}\text{there exists a directed path where the arc associated} \\ \text{to } A_i \text{ precedes the arc associated to } A_j\end{array}$$

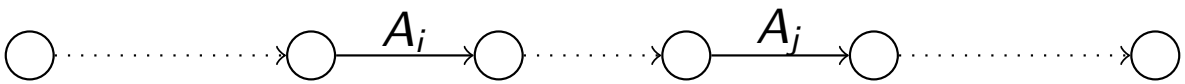

Each node v corresponds to the event "end of all the activities $(i, v) \in \delta^-(v)$" and, hence, to the possible beginning of all the $(v, j) \in \delta^+(v)$.

Example

Activities: A, B, C, D, E
Precedences: $A \propto B, A \propto C, B \propto D, C \propto D, B \propto E$.

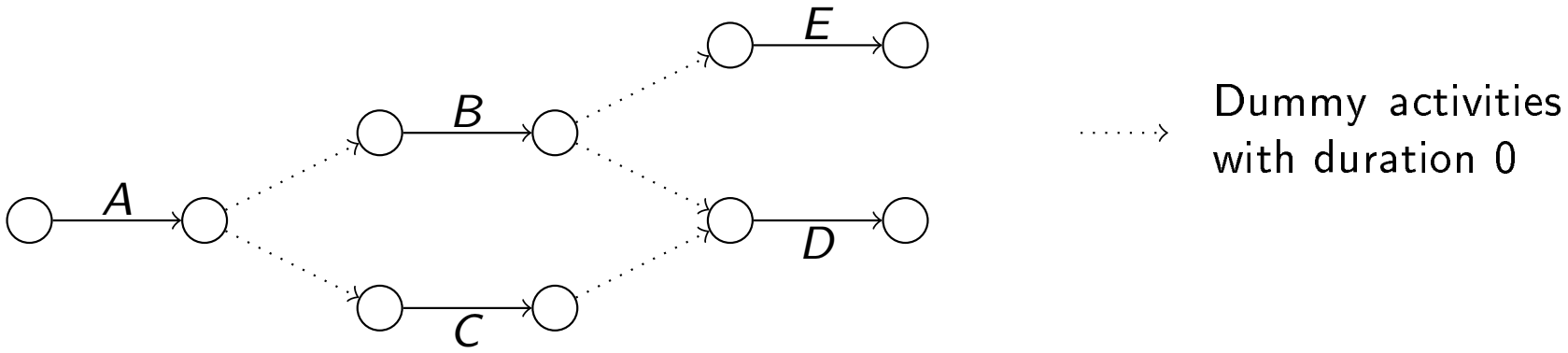

Property 7

The directed graph G representing any project is acyclic (it is a DAG).

Proof.

By contradiction: any circuit corresponding to a sequence of precedence constraints $A_{i1} \propto A_{12}, A_{12} \propto A_{23}, \ldots, A_{jk} \propto A_{ki}$ would imply a logical inconsistency. □

Example

Graph G can be simplified by contracting some arcs:

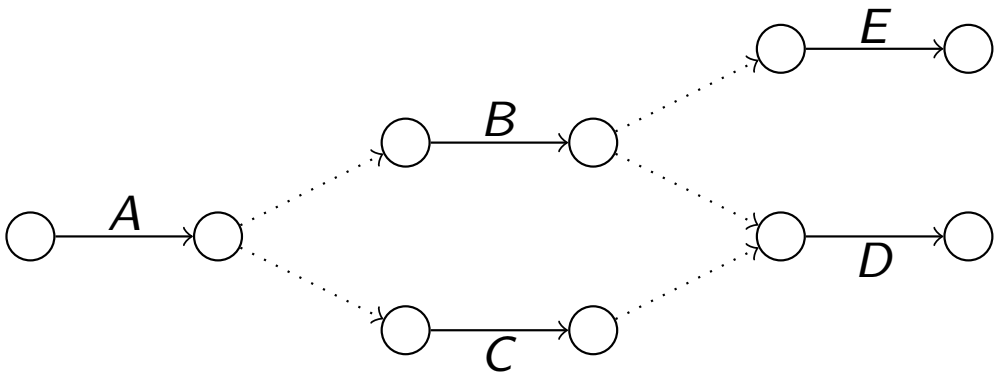

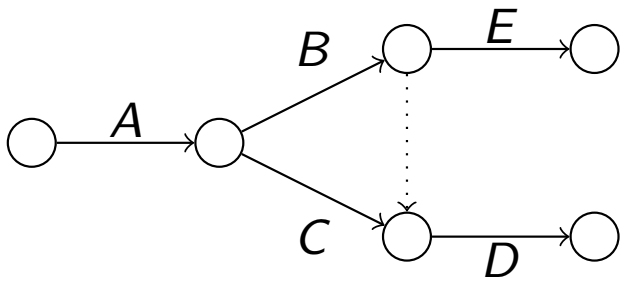

Pay attention not to introduce unwanted precedence constraints.

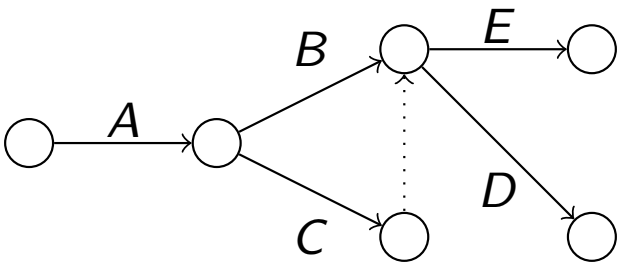

If this dummy activity is maintained, unwanted $C \propto E$ is implied!

Artificial nodes or artificial arcs are introduced so that graph G:

- contains a unique initial node s corresponding to the event "beginning of the project",
- contains a unique final node t corresponding to the event "end of the project",
- does not contain multiple arcs (with same endpoints).

Example

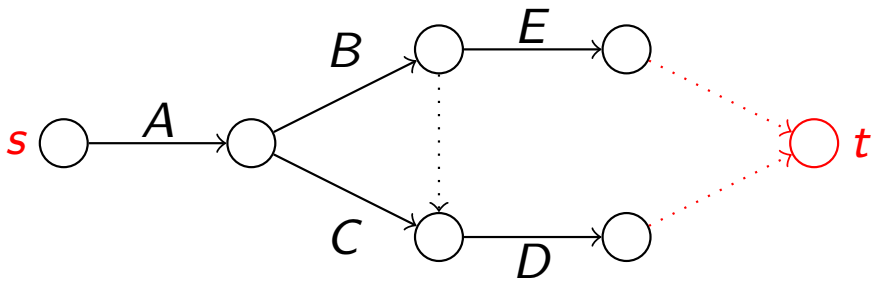

or

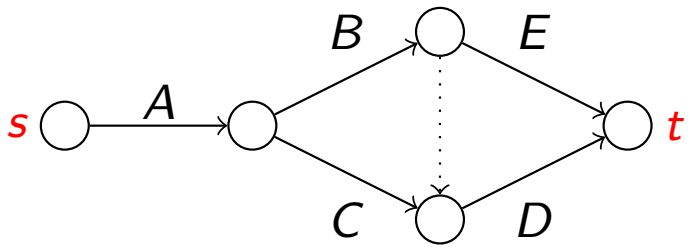

Problem 3

Given a project (set of activities with durations and precedence constraints), schedule the activities so as to minimize the overall project duration, i.e., the time needed to complete all activities.

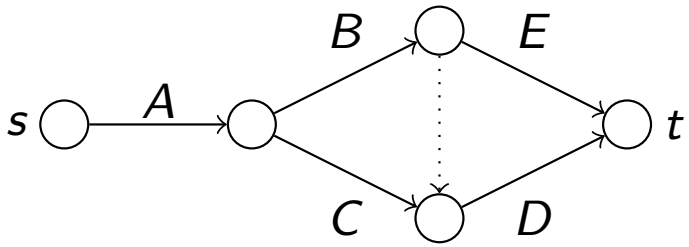

Property 8

The minimum overall project duration = length of a longest path from s to t.

Proof.

Since any $s - t$ path represents a sequence of activities that must be executed in the specified order, its length provides a lower bound on the minimum overall project duration. □

Critical path method (CPM)

Determines:

- a schedule (the order and the alotted time for the activities) that minimizes the overall project duration;
- the slack of each activity, i.e., the amount of time by which its execution can be delayed, without affecting the overall minimum project duration.

Initialization: Construct G representing the project and find a topological order

Step I: Consider the nodes by increasing indices and, for each $h \in N$, find:
the earliest time $Tmin_h$ at which the event associated to node h can occur ($Tmin_n$ is the minimum project duration).

Step II: Consider the nodes by decreasing indices and, for each $h \in N$, find:
the latest time $Tmax_h$ at which the event associated to node h can occur without delaying the project completion date beyond $Tmin_n$.

Step III: For each activity $(i, j) \in A$, find the slack: $\sigma_{ij} = Tmax_j - Tmin_i - d_{ij}$.

Example

Consider the following project:

Activity	Duration	Predecessors
A	3	–
B	2	A
C	3	A
D	3	C
E	4	B, C
F	3	B
G	1	E, D
H	4	C
I	2	F

Precedence constraints:
$A \propto B, A \propto C, C \propto D, B \propto E,$
$C \propto E, B \propto F, E \propto G, D \propto G,$
$C \propto H, F \propto I$

Determine the overall minimum duration of the project and the slack for each activity.

Activities: $A, B, C, D, E, F, G, H, I$

Precedences: $A \propto B, A \propto C, C \propto D, B \propto E,\ C \propto E, B \propto F, E \propto G, D \propto G,$
$C \propto H, F \propto I$

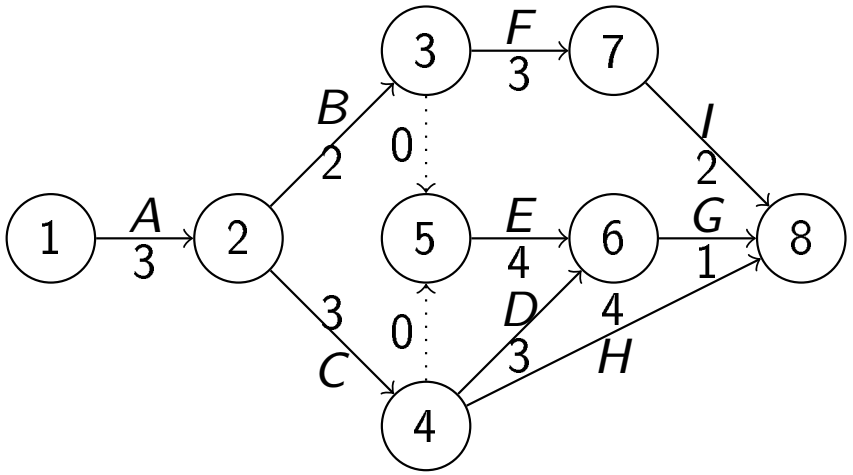

Dummy activities with duration 0

Step I

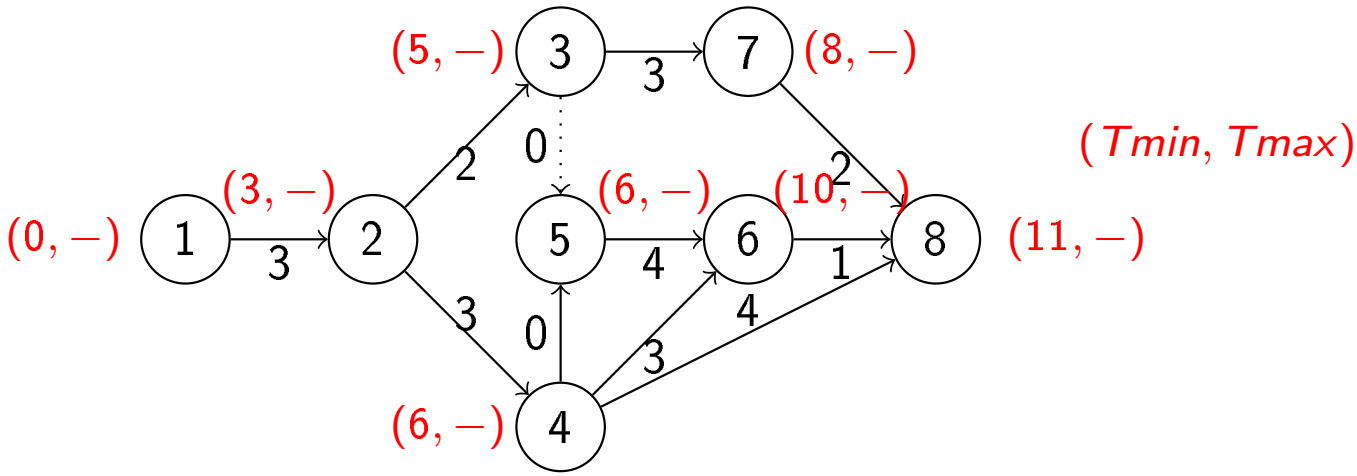

Step II

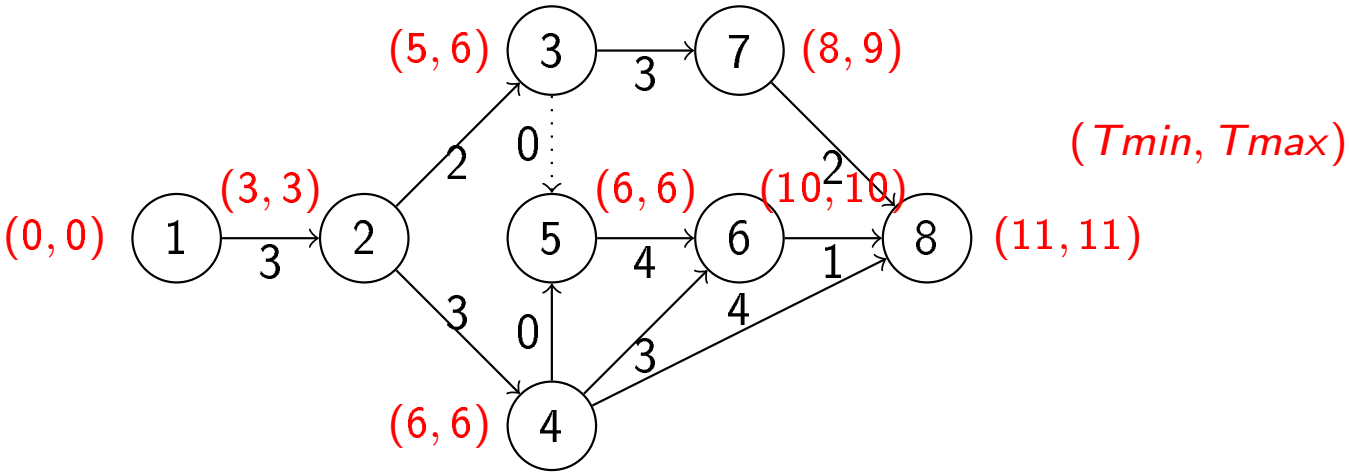

Longest path

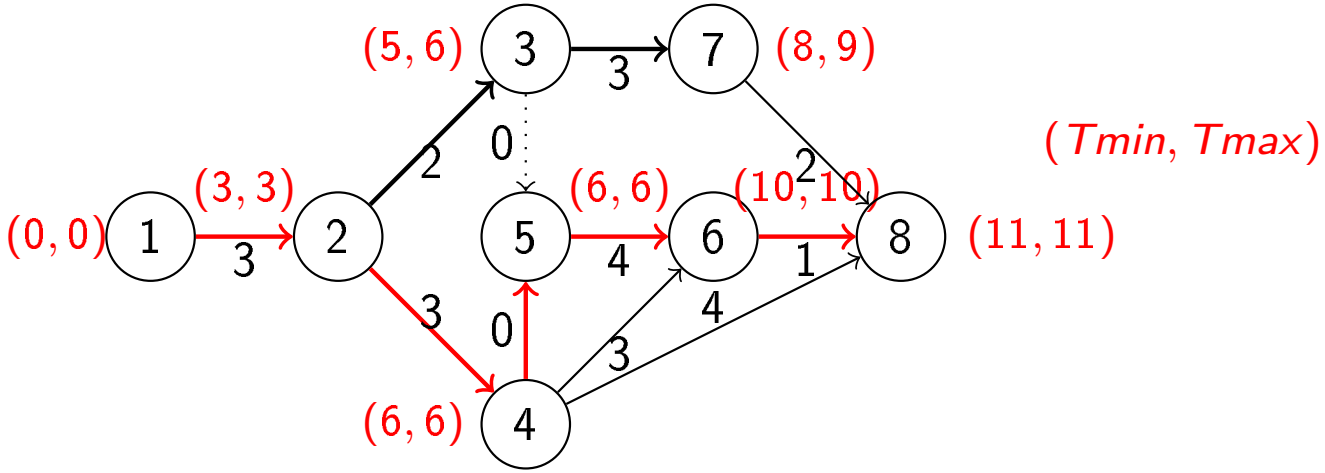

Critical path method

- Input: Graph $G = (N, A)$, with $n = |N|$, $m = |A|$ and the duration d_{ij} associated to each $(i, j) \in A$.
- Output: $(Tmin_i, Tmax_i)$, for $i = 1, \ldots, n$.

Algorithm 7: CPM

Sort the nodes topologically
$Tmin_1 \leftarrow 0$
for $j = 2, \ldots, n$ **do**
  $Tmin_j \leftarrow \max\{Tmin_i + d_{ij} : (i, j) \in \delta^-(j)\}$
$Tmax_n \leftarrow Tmin_n$
/* minimum project duration */
for $i = n - 1, \ldots, 1$ **do**
  $Tmax_i \leftarrow \min\{Tmax_j - d_{ij} : (i, j) \in \delta^+(i)\}$

Complexity order

$O(n + m)$, or simply $O(m)$.

Definition 4

An activity (i, j) with zero slack ($\sigma_{ij} = Tmax_j - Tmin_i - d_{ij} = 0$) is critical.

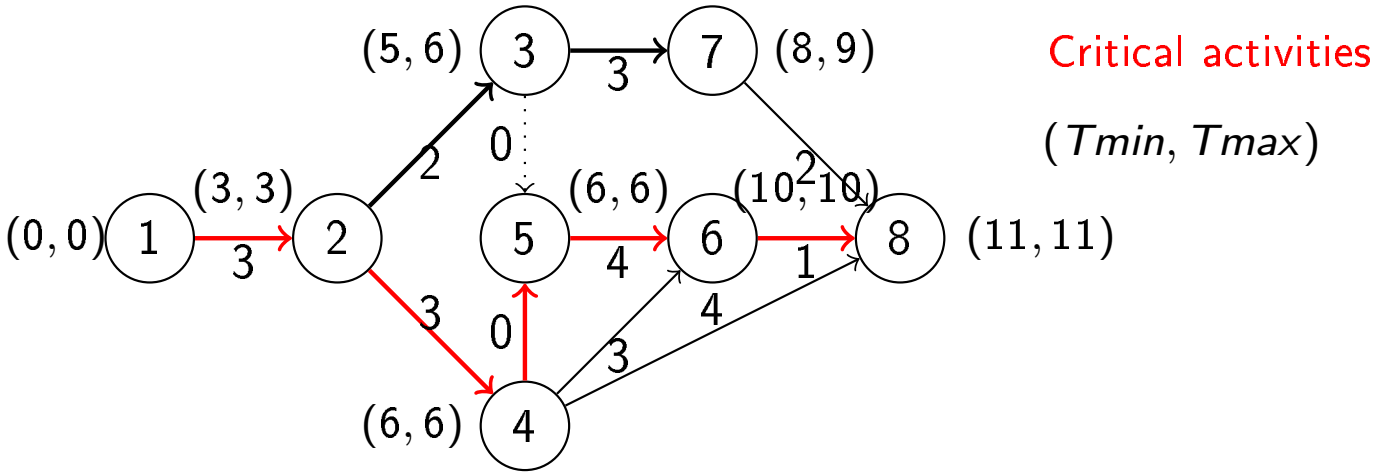

$(3, 7)$, $(4, 6)$ and $(4, 8)$ are not critical, since:

$$\sigma_{37} = 9 - 5 - 3 = 1, \quad \sigma_{46} = 10 - 6 - 3 = 1, \quad \sigma_{48} = 11 - 6 - 4 = 1.$$

Note: $Tmin_i = Tmax_i$ and $Tmin_j = Tmax_j$ do not suffice to have $\sigma_{ij} = Tmax_j - Tmin_i - d_{ij} = 0$!

Definition 5

A critical path is an $s - t$ path only composed of critical activities (one such path always exists).

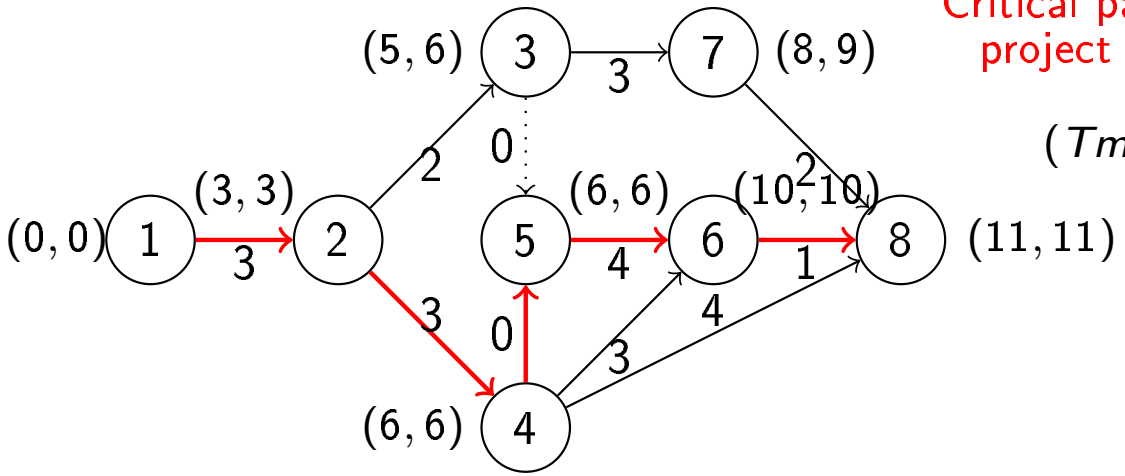

Critical path with minimum project duration (= 11)

$(Tmin, Tmax)$

Gantt charts

Provide temporal representations of the project.

Henry Gantt
(1861-1919)

Gantt chart at earliest: Each activity (i, j) starts at time $Tmin_i$

Gantt chart at latest: Each activity (i, j) ends at time $Tmax_j$
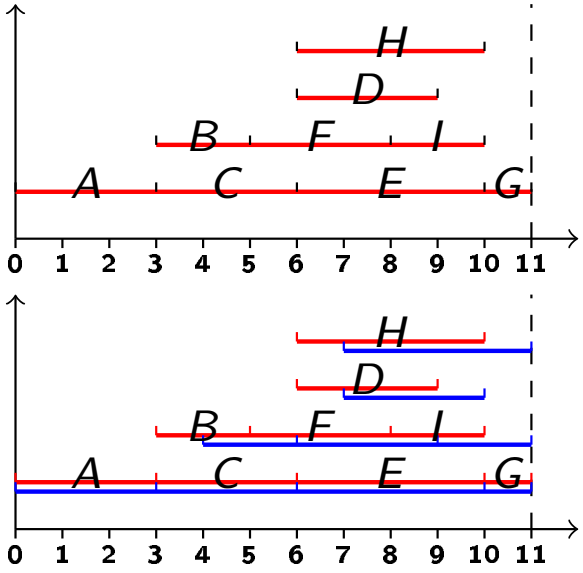
(i, j)	d_{ij}	$Tmin_i$	$Tmax_j$
A	3	0	3
B	2	3	6
C	3	3	6
D	3	6	10
E	4	6	10
F	3	5	9
G	1	10	11
H	4	6	11
I	2	8	11